CSEC PHYSICS

Jan 2026 – Paper 2

Solutions

Kerwin Springer

Best Online Lessons in the Caribbean
WhatsApp **+1868-310-1306** for more information

SECTION A

Answer ALL questions.

1. (a) A class is investigating whether the amount of insulation around a container affects the rate at which a liquid cools.

For this experiment, two test tubes, A and B, were set up as shown in Figure 1. Test tube A has insulation of a given thickness around it. The insulation around Test tube B, which was made of the same material as the insulation around Test tube A, was much thicker.

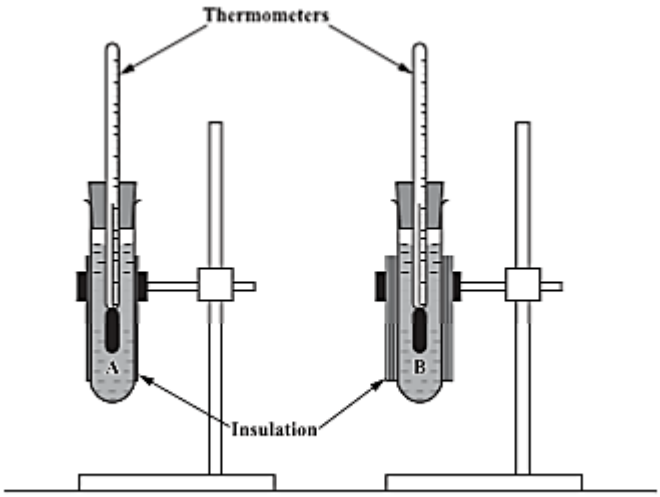

Figure 1. Setup for the experiment.

Procedure

1. Hot water was poured into Test tube A and Test tube B, up to the level of the top of the insulation.
2. The initial temperature, e, of the water in each test tube was recorded and the stop clock was immediately started.

3. Temperature readings were taken from both test tubes A and B at 30-second intervals over a period of 240 seconds.

(a) A student touched the bottom of each test tube and exclaimed that they were very hot. State the method of heat transfer by which heat was transmitted from the test tube to the student's hands. (1 mark)

Conduction

(b) Complete Table 1 by inserting the missing values under the time column to show the results of the experiment (3 marks)

Time (t/s)	Temperature of Test Tube A ($\theta/^0$C)	Temperature of Test Tube B ($\theta/^0$C)
0.0	71.0	71.0
30.0	69.0	69.4
60.0	66.0	68.2
90.0	64.0	66.3
120.0	62.5	65.2
150.0	60.5	65.0
180.0	58.5	63.7
210.0	56.0	61.8
240.0	54.0	60.5

Kerwin Springer

(c) On the grid provided on your answer booklet, plot a graph of temperature against time and draw a line of best fit for Test tube A ONLY. (8 marks)

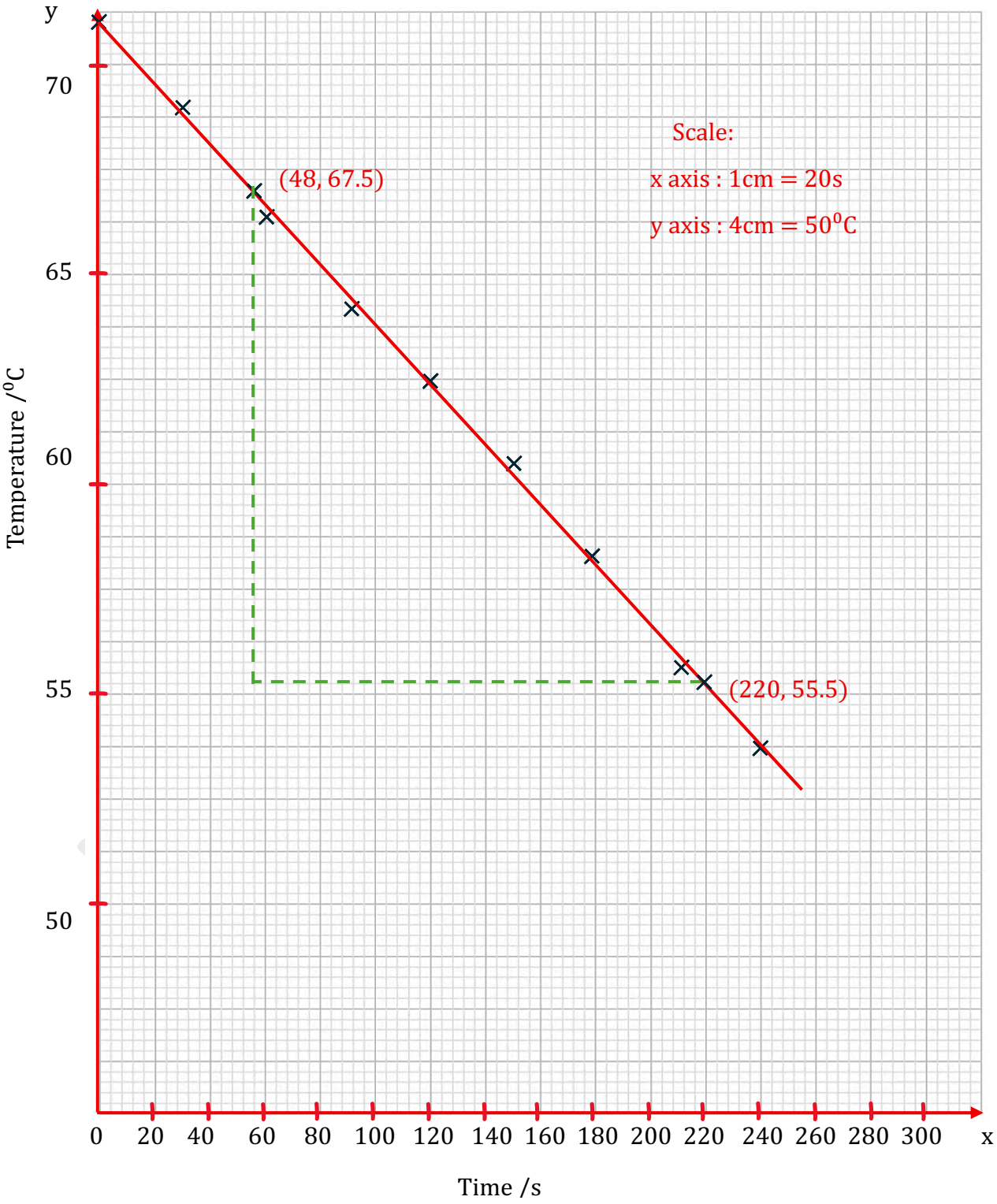

Best Online Lessons in the Caribbean
WhatsApp **+1868-310-1306** for more information

(d) Using your graph, calculate the gradient. G. of the line. Show clearly on the graph the coordinates used to obtain the gradient. (6 marks)

$$Gradient = \frac{y_2 - y_1}{x_2 - x_1}$$

Using points (48, 67.5) and (220, 55.5) from Graph

$$Gradient = \frac{67.5 - 55.5}{48 - 220}$$

$$= -0.070\ ^0C/s$$

(e) What physical quantity does the gradient represent? (1 mark)

Rate of change of temperature (ie the rate at which the water cools)

(f) The magnitude of the gradient for the graph for Test tube B is less than that for Test tube A. Hence, or by using the information given in Table 1 for Test tube B, state how the thickness of the insulation affects the rate at which the water cools. Give a reason to justify your answer. (2 marks)

Since the gradient for Test Tube B less than Test Tube A, it means that the water is cooling at a slower rate. This means the greater the thickness of the insulation, the slower heat is lost by the water.

(g) State TWO actions that the students would have taken to ensure that the temperature readings in this experiment were made as accurate as possible.

(2 marks)

Kerwin Springer

- Read at eye level – No parallax error
- Immerse the bulb of the thermometer fully in the water without touching the bottom of the tube.

(h) Suggest TWO improvements that could be made to the apparatus or procedures to ensure that the investigation into the effect of insulation on the rate of cooling is more reliable. (2 marks)

- Repeat the experiment to obtain averages
- Use a thermocouple to obtain more accurate readings

Total 25 marks

2. (a) Distinguish between the terms 'gravitational potential energy (E_P)' and kinetic energy (E_k). (3 marks)

Gravitational Potential Energy is the energy a body possesses due to its position. Its equation is given by the following:

$$E_P = mgh$$

Kinetic energy is the energy a body possesses due to its motion. Its equation is given by the following:

$$E_k = \frac{1}{2}mv^2$$

Kerwin Springer

(b) A baggage handler at an airport lifts suitcases from the carriage that brings them from the plane and places them on a conveyor belt. The moving belt then transfers the suitcases to the passengers. Figure 3 shows the position of the suitcase at different stages in its motion.

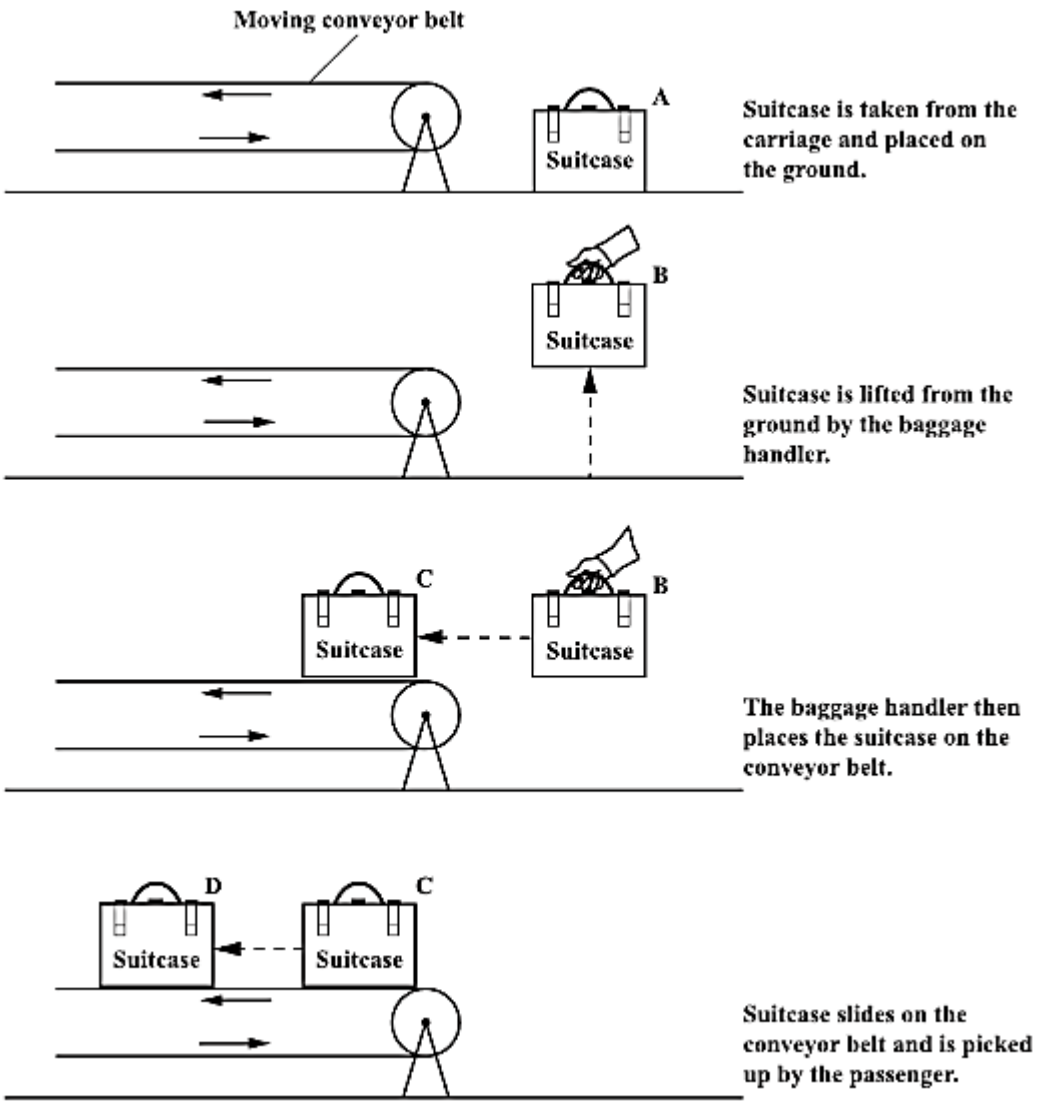

Figure 3. Stages of the position of the motion of the suitcase

(i) Describe how the total energy of the suitcase at Position A compares with the total energy of the suitcase at Position B

Total energy at A = 0 joules, since zero height and zero motion. However, at B we have maximum E_P, that is, Total Energy = E_P (assuming that B is the highest point the structure reaches)

(ii) Describe how the total energy of the suitcase at Position D compares with the total energy of the suitcase at Position C.

At C, Total Energy = 0 just before it started moving on the belt since both height and velocity are 0.

At D Total Energy = E_k just before it was removed from the belt by the passenger

(c) At the airport, a motor lift the luggage from the ground and places it on a belt so it can pass through the scanner.

The current in the motor is 5.0 A and the voltage across it is 110V. The motor takes 2.5 s to lift the mass.

(i) Calculate the electrical energy transferred from the motor as it lifts the mass.

(3 marks)

Method 1:

$E = vIt$

$E = (110)(5)(2.5)$

$E = 1375\ J$

Kerwin Springer

Method 2:

$P = IV$

$P = (5)(110)$

$P = 550W$

$E = PT$

$E = (550)(2.5)$

$E = 1375J$

(ii) The motor lifts a 30kg suitcase to a height of 75cm. Calculate the gravitational potential energy E_P gained by the 30 kg suitcase. (2 marks)

$E_P = mgh$

$E_P = (30)(10)(0.75)$

$= 225J$

(iii) Calculate the efficiency of the motor (3 marks)

$$\% \text{ Efficiency} = \frac{Useful\ Energy\ Output}{Total\ Energy\ Imput} \times 100$$

$$= \frac{225}{1375} \times 100$$

$$= 16.4\%$$

Total 15 marks

Kerwin Springer

3. Figure 4 shows the structure of a transformer.

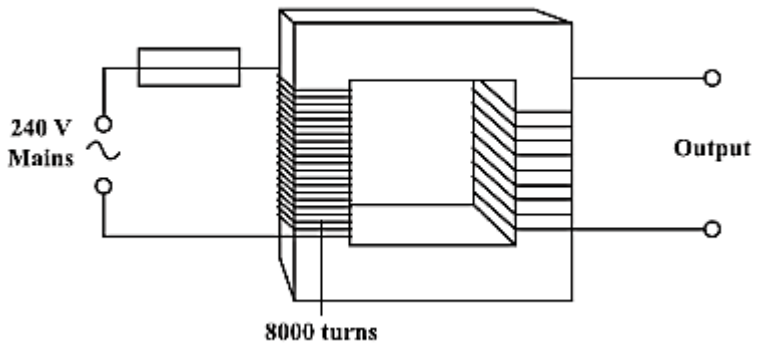

Figure 4. The structure of a transformer

The primary coil is connected to an alternating current supply of voltage 240 V and an output voltage is induced in the secondary coil. There are 8000 turns in the primary coil

(a) Explain the term 'alternating current' (2 marks)

Alternating current is current that changes direction periodically, as opposed to direct current that only flows in one direction.

(b) State TWO features of the core of transformers, as the one shown in Figure 4. (2 marks)

- Laminated – to reduce Eddy currents
- Soft Iron - easily magnetized, low resistance

(c) Using Figure 4, suggest why the transformer is classified as a step down transformer. (1 mark)

The number of turns in the primary coil is more than the number of turns in the secondary coil, hence the transformer is classified as a step down transformer.

Kerwin Springer

(d) Describe how the output voltage is induced in the secondary coil. (2 marks)

The AC causes the magnetic field in the soft iron core to change continuously. By mutual electromagnetic induction, the changing magnetic flux induces an alternating voltage across the secondary coil.

(e) Given that the output voltage is induced in the secondary coil. (2 marks)

$$\frac{V_p}{V_s} = \frac{N_p}{N_s} = \frac{I_s}{I_p}$$

$$\frac{240}{6} = \frac{8000}{N_s}$$

$$N_s = 200 \text{ Turns}$$

(f) A fuse is connected in series with the primary coil.

i. What is the function of a fuse? (2 marks)

A fuse is an electrical safety device that protects circuits and equipment by interrupting the flow of an excessive current. It does this by breaking the circuit when a certain amount of the current is exceeded.

ii. A current of 150 mA flows in the primary coil. Assuming that the transformer is ideal, calculate, in Amperes, the current through the secondary coil. (3 marks)

$$\frac{I_s}{I_p} = \frac{V_p}{V_s}$$

$$\frac{I_s}{0.15} = \frac{240}{6}$$

$$I_s = 6A$$

Total 15 marks

Kerwin Springer

SECTION B

Answer ALL questions.

4. Electromagnetic waves have many practical uses.

   (a) Draw one line from each type of electromagnetic wave to match it with its use

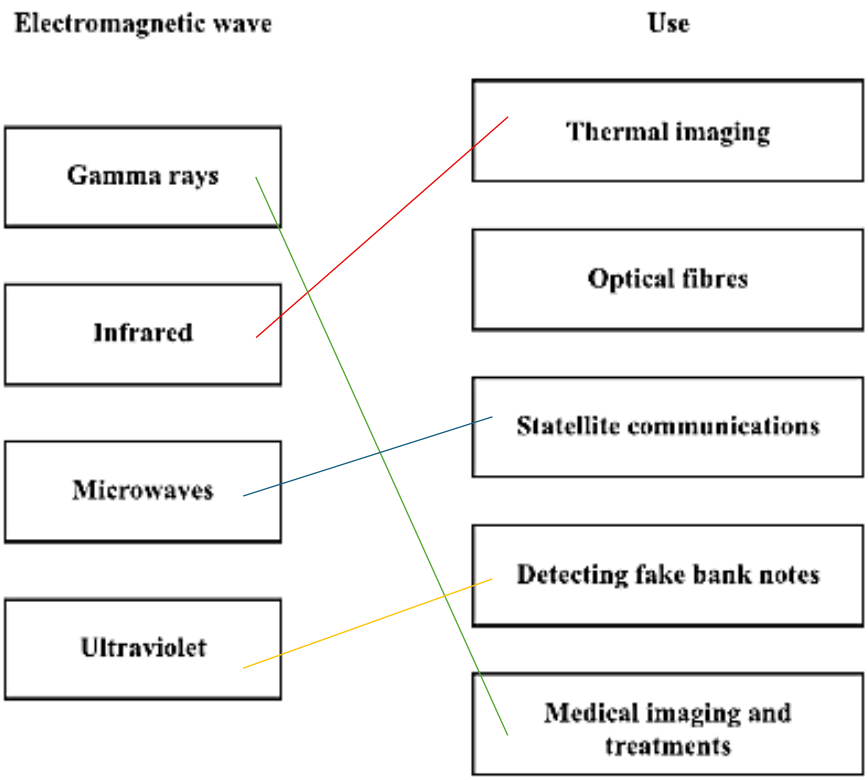

Best Online Lessons in the Caribbean
WhatsApp **+1868-310-1306** for more information

(b) Figure 5 shows circular wave fronts produced at the centre of a wave pool. Two paddle boats, P and Q, float on water in the pool. Boat P is on the crest of a wave at the instant shown in Figure 5.

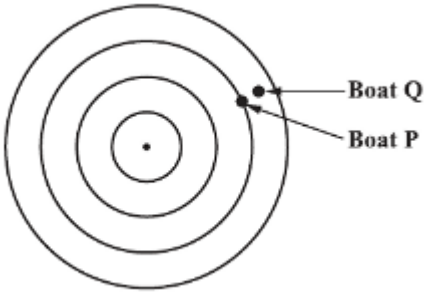

Figure 5. Circular Wave Fronts

In figure 6, a snapshot of the displacement – distance graph of a wave at a particular instant is shown. The wave takes 0.95 s to move from Boat P to Boat Q.

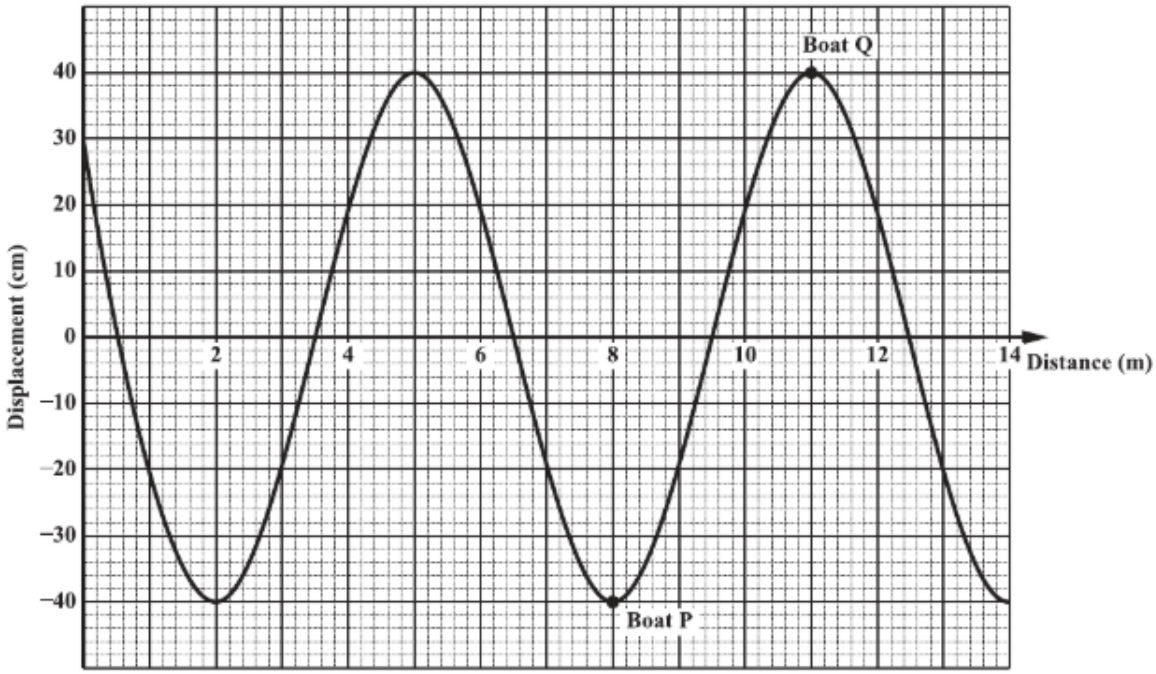

Figure 6. Displacement – distance graph of a wave

Best Online Lessons in the Caribbean
WhatsApp **+1868-310-1306** for more information

(i) Define the following terms associated with waves.

Wavelength

Wavelength is the distance between successive points (in phase) in a wave. Eg crest to crest or trough to trough

Period

Period is the time taken for one complete oscillation.

(i) Using Figure 6 on page 9 AND/OR the other information given, calculate

(a) The period of the wave

Period = 2 x 0.95

= 1.9 seconds

(b) The frequency of the wave

Frequency = $\frac{1}{t}$

$= \frac{1}{1.9}$

= 0.53 Hz

(c) The speed of the wave

Speed = fλ (from graph λ = 11-5 = 6m)

=(0.53)(6)

= 3.16 m/s

Kerwin Springer

(c) A student investigates the refraction of light when it travels from glass to air.

Figure 7 shows the arrangement of the apparatus for the investigation.

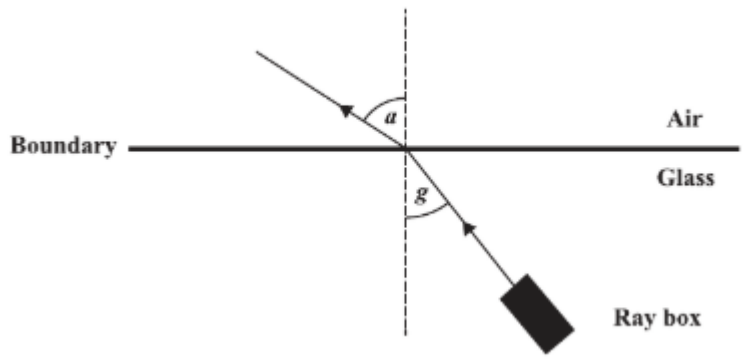

Figure 7. Apparatus for the experiment

The student measures the Angle a in the air and the angle g in the glass and records the results as shown in Table 2

TABLE 2: RESULTS FROM THE EXPERIMENT

Angle a in the Air	Angle g in the Glass
48^0	27.5^0

Use the data in Table 2 to calculate the refractive index of the glass (Take the refractive index of air to be 1) (3 marks)

Using i = 48^0 and r = 27.5^0 (Using angles in reverse so from air to glass)

$$_a n_g = \frac{\sin i}{\sin r}$$

$$= \frac{\sin 48}{\sin 27.5}$$

$$= 1.61$$

5. Figure 8 shows a standing steam iron which Kaleb uses in his laundry mart. The tank is filled with water, and the steam iron is used until 80% of the water has been converted to steam and released through the ironing plate.

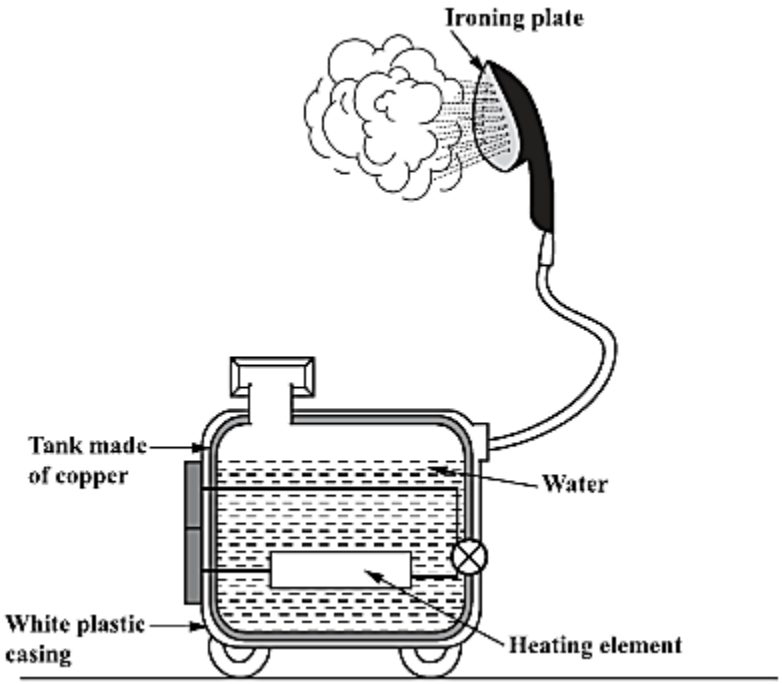

Figure 8. Standing steam iron

(a) Explain how the water in the tank of the standing steam iron is heated by the process of convection. (2 marks)

- Heating element heats the nearby water, thus raising the temperature of the surrounding water.
- This in turn causes the density to decrease, thus this water rises and is replaced by cooler (more dense) water.

- This is called a convection current. This process is repeated until all the water in the tank is heated

(b) (i) State the name of the process by which water is converted to steam. (1 mark)

Boiling/Vapourization

(ii) Using the kinetic theory of matter, fully describe the process in b (1)

Based on the Kinetic Theory of matter, an increase in temperature results in an increase in the Kinetic energy of its particles. At the boiling point of water (100^0C), the particles gain enough kinetic energy to break intermolecular forces and change state from liquid to gas. This process is called boiling.

(3 marks)

(c) Explain how the white plastic casing and the tank being made of copper help to reduce thermal energy loss to the surroundings. (2 marks)

- The plastic is an insulator and reduce heat loss via conduction
- The plastic casing being white allows for the reflection of radiation, but more importantly allows it to lose heat via radiation slower than a black surface. Copper is a good thermal conductor, so it efficiently transfers heat from the heating element to the water inside the tank, ensuring uniform heating and reducing energy wasted in the tank walls.

(d) The following information is about the standing steam iron is given

- Initial temperature of water is 32 °C
- Mass of water = 1.5 litres

Kerwin Springer

- The mass of 1.0 litre of water is 1.0 kg
- Amount of water converted to steam = 80%
- The specific heat capacity of water = 4.2 Jg^{-1} $^0C^{-1}$
- Specific latent heat of vaporization of water = 2.3 kJ g^{-1}

Using the information given above, calculate the amount of energy used to

(i) Raise the temperature of the water in the tank to its boiling point. (4 marks)

1.5L of water = 1.5kg = 1500g

$Q = mc\Delta T$

$= (1500)(4.2)(100 - 32)$

$= 428400J$

$= 4.28 \times 10^5\ J$

(ii) Produce the steam released

Since 80% was converted to steam

80% of 1500 = 1200g

$Q = mL_v$

$= (1200)(2300)$

$= 2{,}760{,}000J$

$= 2.7\ \times 10^6 J$

Kerwin Springer

6. (a) Radon, $^{220}_{86}Rn$, is a radioactive gas which escapes from underground rocks and causes a large part off the natural background radiation in Country A. This element has 3 isotopes.

(i) State the number of

a) Protons in a nucleus of $^{220}_{86}Rn$ (1 mark)

86

b) electrons that orbit the nucleus. (1 mark)

86

(ii) Calculate the number of neutrons in a nucleus of $^{220}_{86}Rn$ (1 mark)

Neutrons = 220-86

= 134

(iii) Explain what is meant by the term 'isotope (2 marks)

Isotopes are atoms of the same element that have the same number of protons but different numbers of neutrons (and therefore different mass numbers).

(iv) Homeowners in areas where Radon gas is produced were made aware that $^{220}_{86}Rn$ emits alpha particles. State ONE way in which the presence of Radon gas in buildings can be a health hazard. (1 mark)

It can cause damage to the respiratory system (Inhalation hazard) radiation damage to lung tissue because of its ionizing effect.

Kerwin Springer

(b) Some pond water became contaminated by the release of radioactive waste. The radioactivity of the sample of contaminated water is tested every 5 days for 50 days. The data obtained was plotted as a graph as shown in Fig 9.

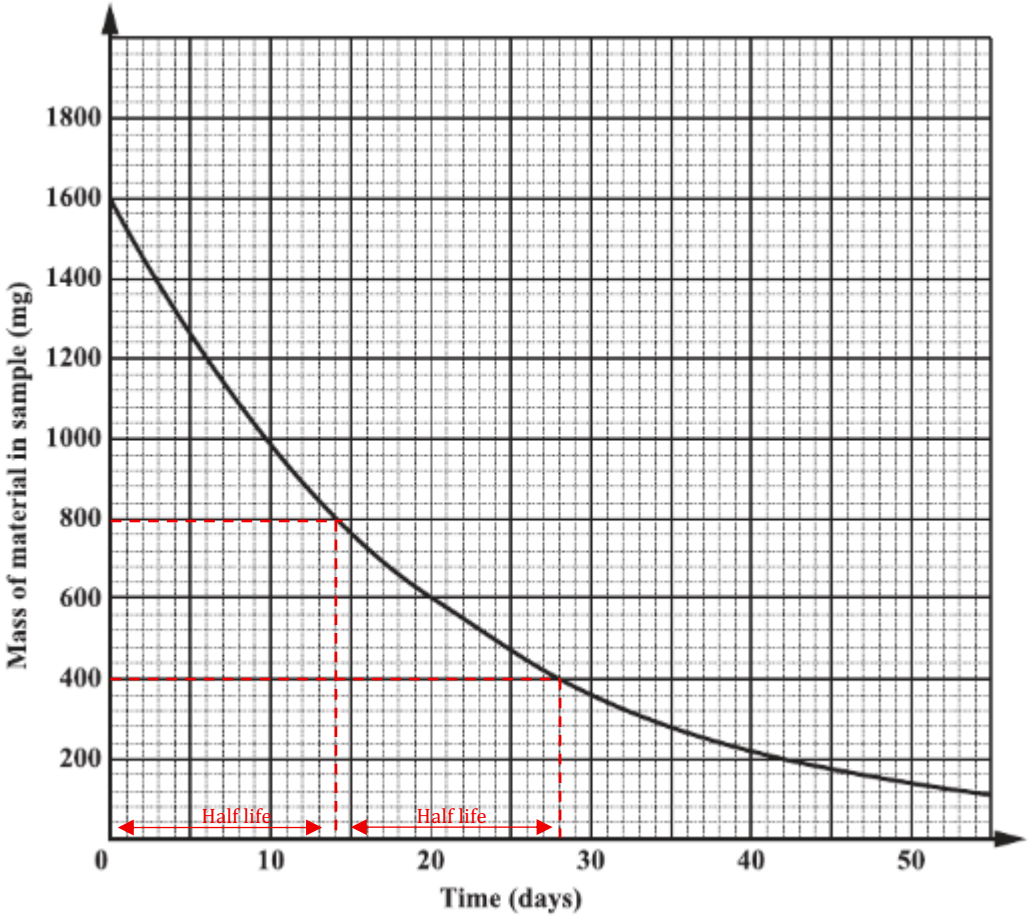

Figure 9. Graph showing the radioactivity of a sample of contaminated water

(i) Using the graph, determine the

a) Half life of the radioactive material in the sample. Draw lines on the graph or use alternative points to justify your answer. (2 marks)

As seen from the graph, the half-life is the time taken for half the number of radioactive nuclei in a sample to decay.

Half life (from graph) = 14 days

b) Time it takes for the mass of the radioactive material in the sample to fall to $\frac{1}{16}$ of its initial value. (3 marks)

To reach $\frac{1}{16}$ of its initial value, the sample must go through 4 half lives.

$\frac{1}{2}$ to $\frac{1}{4}$ to $\frac{1}{8}$ to $\frac{1}{16}$

Therefore time taken $= 4 \times 14$

$= 56\ days$

c) Mass of the radioactive material remaining in the sample after six half lives (1 mark)

After six half-lives, remaining fraction will be $\left(\frac{1}{2}\right)^6 = \left(\frac{1}{64}\right)$

Mass remaining $= \frac{1}{64} \times 1600$

$= 25mg$

(ii) If the sample of the contaminated water had been smaller , state how this would have affected the activity readings. (1 mark)

If the sample was smaller the count rate would have lower activity readings or count rate. While the half life would be the same, since the initial sample was smaller it would mean that a smaller mass is lost during a half life, hence a lower count rate than the initial experiment.

Total 15 marks

Kerwin Springer

END OF TEST

IF YOU FINISH BEFORE TIME IS CALLED, CHECK YOUR WORK ON THIS TEST.

Kerwin Springer